Formulate Backwall Accent

BACKWALL ACCENT 05

(2) Print creates one stucture
Graphics @ 50%

GRAPHIC CODES

WBWA-05 - Double sided
Outside
Total graphic area: 52"w x 193.5"h
Total visual area: 48"w x 189.5"h
Inside
Total graphic area: 52"w x 191.6"h
Total visual area: 48"w x 187.6"h

Please be sure to inclued the 2" bleed around the perimeter to compensate for the finishing of the graphics. Do not design any critical emlements (text, logos, etc.) within 2" of the edge (see dotted lines) and please be aware of the noted obstructions.

General Artwork Guidelines
-cmyk color mode
-do not embed images, supply them
-resolution must be 100-120 ppi
-all fonts must be created to outlines
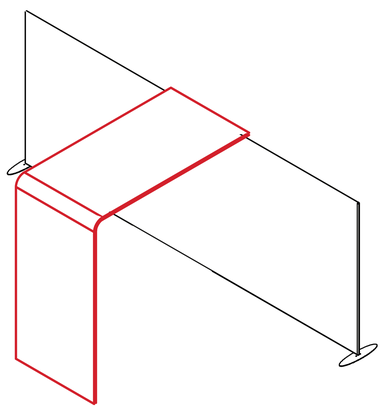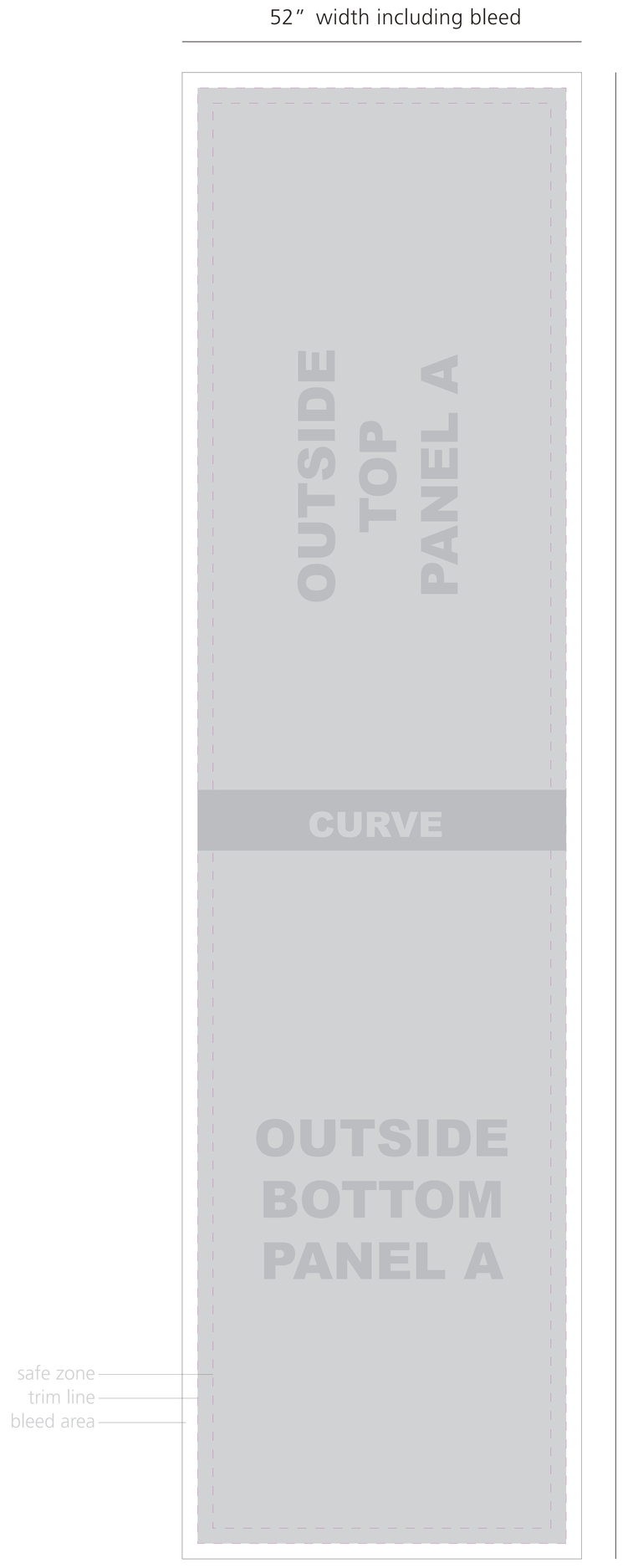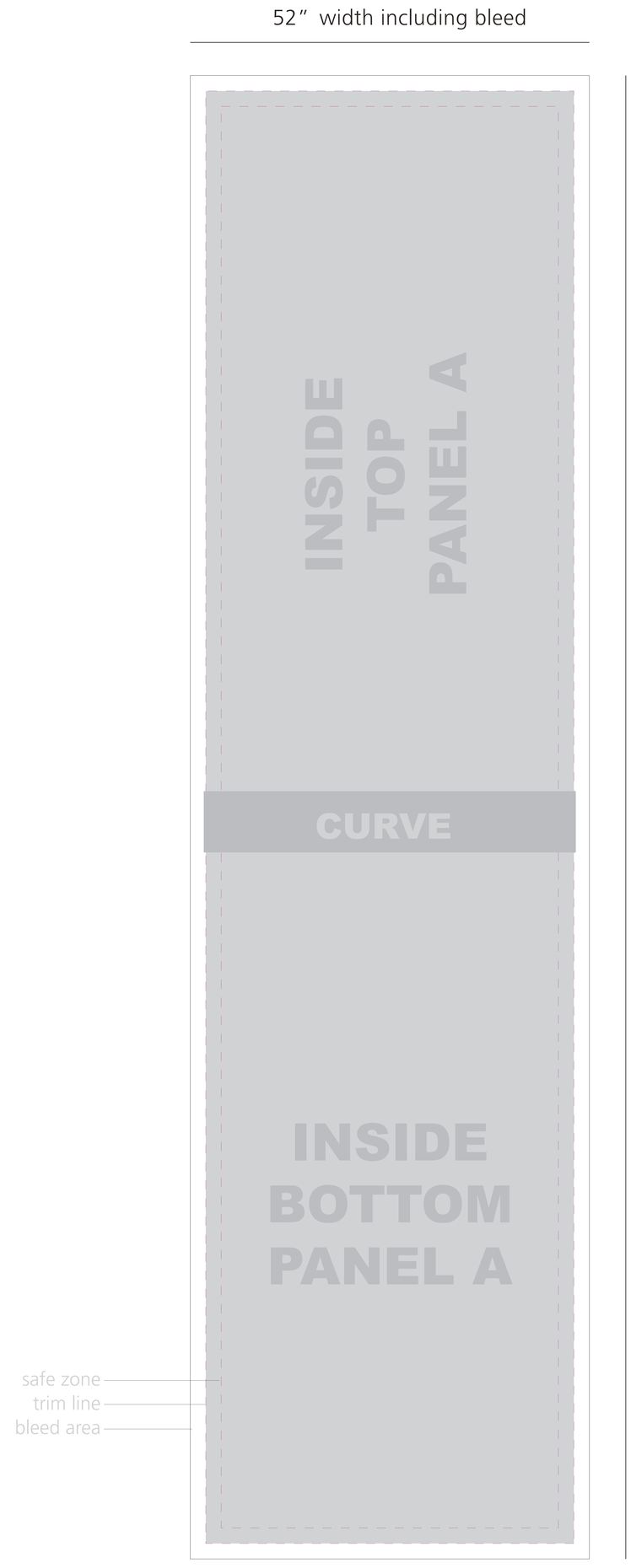
This template was created on: 1.27.2016
This template was modified on: 1.27.2016